COLUMBIA WINCH & HOIST

Manufactured by Allied Power Products, Inc.

WG5000-P-02

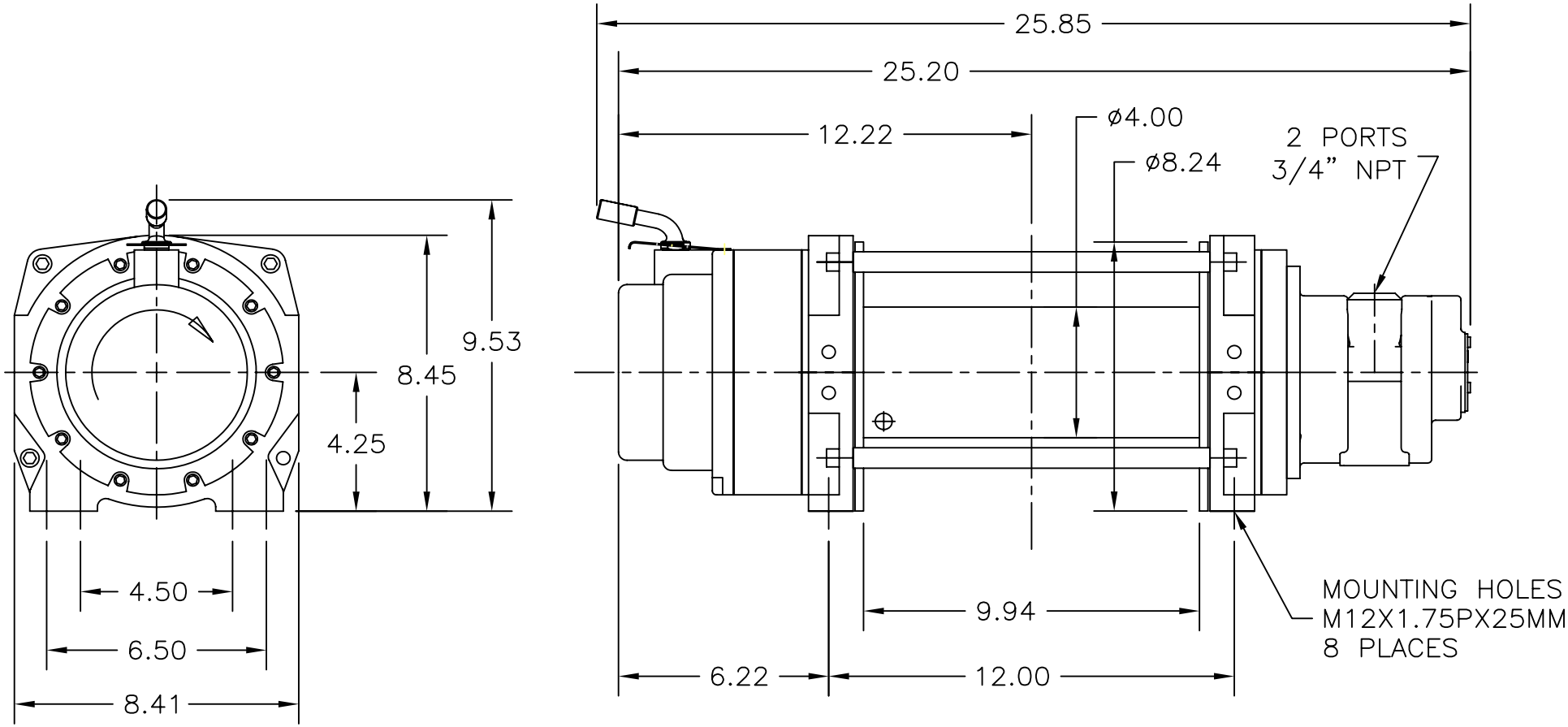

ALLIED POWER PRODUCTS, INC.

THE WINCH & HOIST SPECIALISTS

6590 SW Fallbrook Place, Beaverton OR 97008

Toll Free: 800.248.4896 Phone: 503.626.2654 Fax: 503.646.1996

This print is the property of Allied Power Products, Inc. and may not be used in any manner detrimental to their interest.