COLUMBIA
WINCH & HOIST
Manufactured by Allied Power Products, Inc.

WG3700-2A17-L-01 (3Ø) **WG5600-2A17-L-01 (3Ø)**
WG3700-4A17-L-01 **WG5600-4A17-L-01**
WG3700-2A34-L-01 (3Ø) **WG5600-2A34-L-01 (3Ø)**
WG3700-4A34-L-01 **WG5600-4A34-L-01**

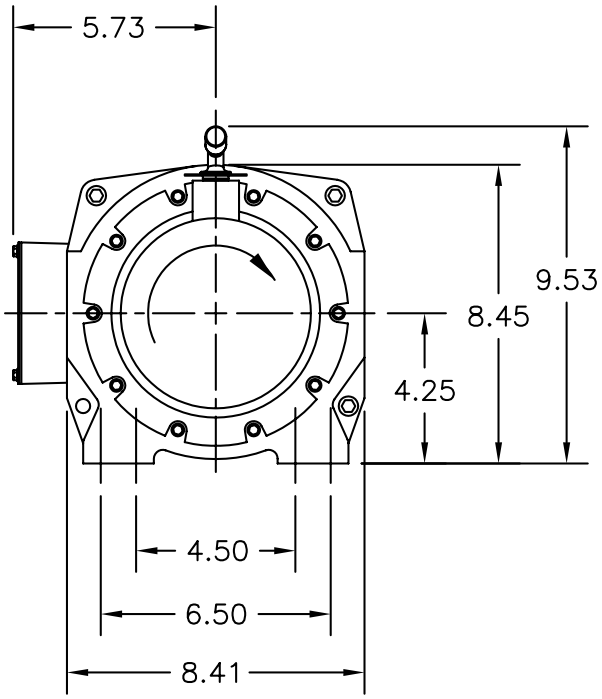

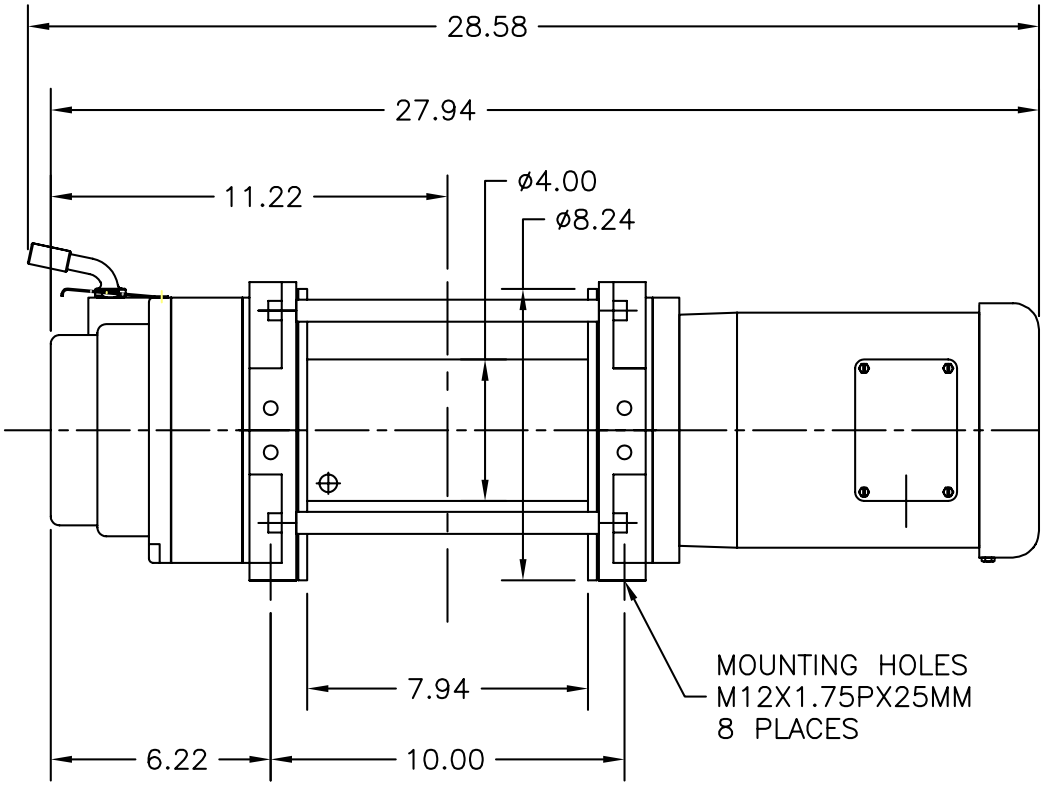

This print is the property of Allied Power Products, Inc. and may not be used in any manner detrimental to their interest.

ALLIED POWER PRODUCTS, INC.
THE WINCH & HOIST SPECIALISTS
6590 SW Fallbrook Place, Beaverton OR 97008
Toll Free: 800.248.4896 Phone: 503.626.2654 Fax: 503.646.1996