COLUMBIA
WINCH & HOIST
Manufactured by Allied Power Products, Inc.

WF2300-1A17-L-01
WF2300-2A17-L-01 (1Ø)
WF2300-1A34-L-01
WF2300-2A34-L-01 (1Ø)
WF3500-1A34-L-01
WF3500-2A34-L-01 (1Ø)

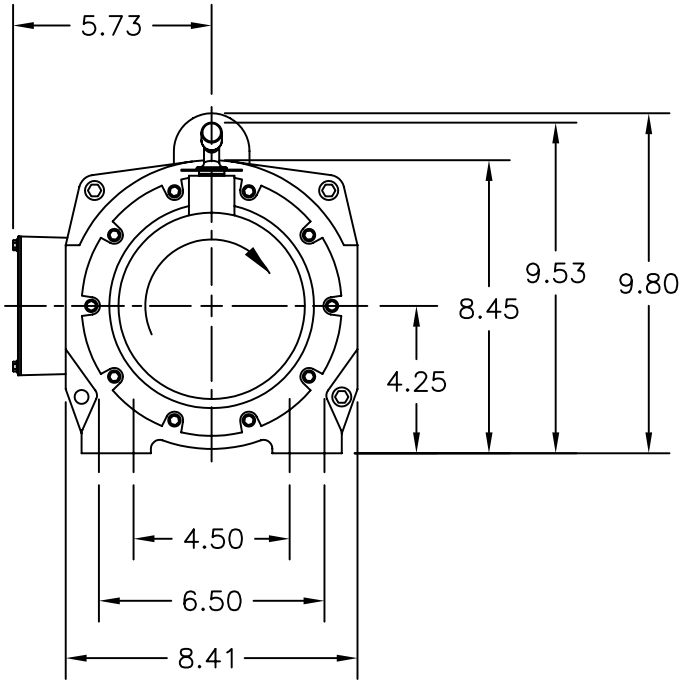

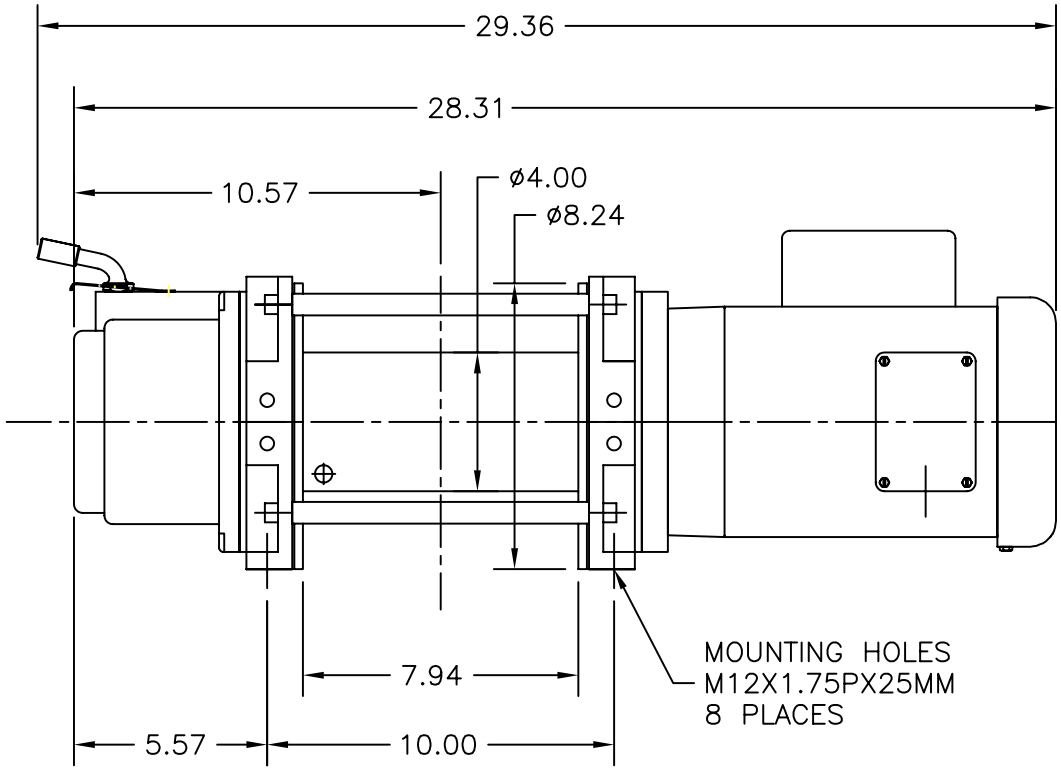

This print is the property of Allied Power Products, Inc. and may not be used in any manner detrimental to their interest.

ALLIED POWER PRODUCTS, INC.
THE WINCH & HOIST SPECIALISTS
6590 SW Fallbrook Place, Beaverton OR 97008
Toll Free: 800.248.4896 Phone: 503.626.2654 Fax: 503.646.1996